Air conditioner

User manual

AC***RN4PKG

- Thank you for purchasing this Samsung air conditioner.
- Before operating this unit, please read this user manual carefully and retain it for future reference.

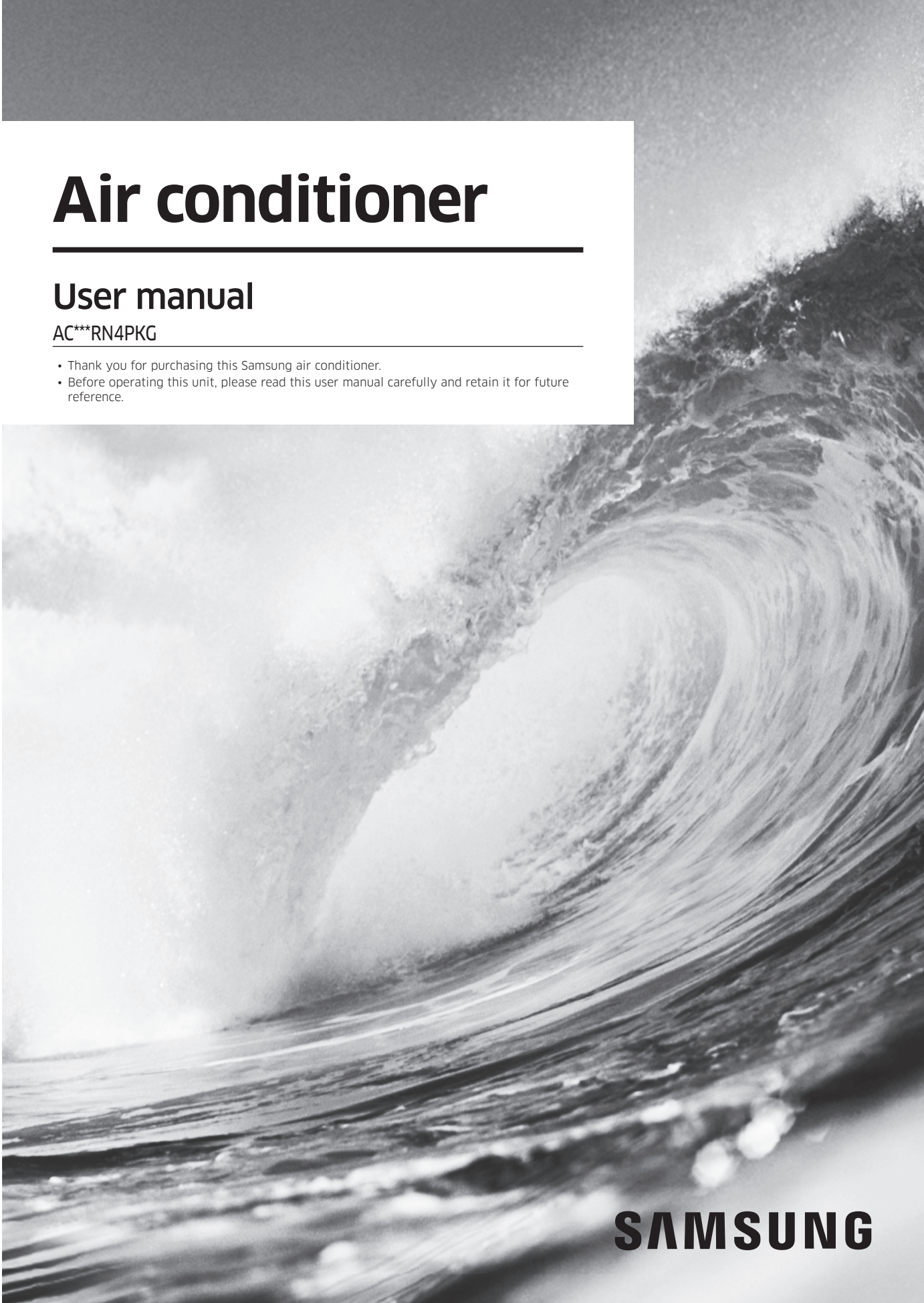

SAMSUNG

Contents

Safety Information 3

Safety Information 3

At a Glance 10

Indoor Unit Overview 10

Operation Features 11

Operating temperature and humidity

Cleaning and Maintenance 12

Cleaning and Maintaining 12

Cleaning the indoor unit exterior • Disassembling the air filter • Cleaning the air filter • Reassembling the air filter • Periodical maintenance • Troubleshooting • Technical specifications

Information about refrigerant 19

Important information: regulation regarding the refrigerant used

Correct Disposal of This Product
(Waste Electrical & Electronic Equipment)

(Applicable in countries with separate collection systems)
This marking on the product, accessories or literature indicates that the product and its electronic accessories (e.g. charger, headset, USB cable) should not be disposed of with other household waste at the end of their working life. To prevent possible harm to the environment or human health from uncontrolled waste disposal, please separate these items from other types of waste and recycle them responsibly to promote the sustainable reuse of material resources.
Household users should contact either the retailer where they purchased this product, or their local government office, for details of where and how they can take these items for environmentally safe recycling.
Business users should contact their supplier and check the terms and conditions of the purchase contract. This product and its electronic accessories should not be mixed with other commercial wastes for disposal.

For information on Samsung's environmental commitments and product-specific regulatory obligations, e.g. REACH, WEEE, Batteries, visit : samsung.com/uk/aboutsamsung/samsungelectronics/corporatecitizenship/data_corner.html

Safety Information

Before using your new air conditioner, please read this manual thoroughly to ensure that you know how to safely and efficiently operate the extensive features and functions of your new appliance.

Because the following operating instructions cover various models, the characteristics of your air conditioner may differ slightly from those described in this manual. If you have any questions, call your nearest contact centre or find help and information online at www.samsung.com.

⚠ **WARNING**

Hazards or unsafe practices that may result in severe personal injury or death.

⚠ **CAUTION**

Hazards or unsafe practices that may result in minor personal injury or property damage.

- Follow directions.
- Do NOT attempt.
- Make sure the machine is grounded to prevent electric shock.
- Cut-off the power supply.
- Do NOT disassemble.

FOR INSTALLATION

⚠ **WARNING**

Use the power line with the power specifications of the product or higher and use the power line for this appliance only. In addition, do not use an extension line.

- Extending the power line may result in electric shock or fire.
- Do not use an electric transformer. This may result in electric shock or fire.
- If the voltage/frequency/rated current condition is different, it may cause fire.

The installation of this appliance must be performed by a qualified technician or service company.

- Failing to do so may result in electric shock, fire, explosion, problems with the product, or injury.

Install a switch and circuit breaker dedicated to the air conditioner.

- Failing to do so may result in electric shock or fire.

Safety Information

Fix the outdoor unit firmly so that the electric part of the outdoor unit is not exposed.

- Failing to do so may result in electric shock or fire.

Do not install this appliance near a heater, inflammable material. Do not install this appliance in a humid, oily or dusty location, in a location exposed to direct sunlight and water (rain drops). Do not install this appliance in a location where gas may leak.

- This may result in electric shock or fire.

Never install the outdoor unit in a location such as on a high external wall where it could fall.

- If the outdoor unit falls, it may result in injury, death or property damage.

This appliance must be properly grounded. Do not ground the appliance to a gas pipe, plastic water pipe, or telephone line.

- Failure to do so may result in electric shock, fire, an explosion, or other problems with the product.
- Never plug the power cord into a socket that is not grounded correctly and make sure that it is in accordance with local and national codes.

CAUTION

Install your appliance on a level and hard floor that can support its weight.

- Failing to do so may result in abnormal vibrations, noise, or problems with the product.

Install the drain hose properly so that water is drained correctly.

- Failing to do so may result in water overflowing and property damage. Avoid adding drain to waste pipes as odours may arise in the future.

The product shall be stored in a room with no ignition sources (e.g. open flames, gas appliance, electric heater, etc.).

- Note that the refrigerant has no odour.

When installing the outdoor unit, make sure to connect the drain hose so that draining is performed correctly.

- The water generated during the heating operation in the outdoor unit may overflow and result in property damage.
  In particular, in winter, if a block of ice falls, it may result in injury, death or property damage.

Do not install the product in a place where thermo-hygrostat is needed (such as server room, machinery room, computer room, etc.)

- Those places do not provide guaranteed operation condition of the product therefore performance can be poor in these places.

FOR POWER SUPPLY

⚠ WARNING

When the circuit breaker is damaged, contact your nearest service centre.

Do not pull or excessively bend the power line. Do not twist or tie the power line. Do not hook the power line over a metal object, place a heavy object on the power line, insert the power line between objects, or push the power line into the space behind the appliance.

- This may result in electric shock or fire.

⚠ CAUTION

When not using the air conditioner for a long period of time or during a thunder/lightning storm, cut the power at the circuit breaker.

- Failing to do so may result in electric shock or fire.

FOR USING

⚠ WARNING

If the appliance is flooded, please contact your nearest service centre.

- Failing to do so may result in electric shock or fire.

If the appliance generates a strange noise, a burning smell or smoke, unplug the power plug immediately and contact your nearest service centre.

- Failing to do so may result in electric shock or fire.

In case of a malfunction, immediately stop operation of the air conditioner and disconnect the entire power system. Then consult the authorized service personnel.

In the event of a gas leak (such as propane gas, LP gas, etc.), ventilate immediately without touching the power line. Do not touch the appliance or power line.

- Do not use a ventilating fan.
- A spark may result in an explosion or fire.

Safety Information

To reinstall the air conditioner, please contact your nearest service centre.

- Failing to do so may result in problems with the product, water leakage, electric shock, or fire.
- A delivery service for the product is not provided. If you reinstall the product in another location, additional construction expenses and an installation fee will be charged.
- Especially, when you wish to install the product in an unusual location such as in an industrial area or near the seaside where it is exposed to salt in the air, please contact your nearest service centre.

Do not touch the circuit breaker with wet hands.

- This may result in electric shock.

Do not turn the air conditioner off with the circuit breaker while it is operating.

- Turning the air conditioner off and then on again with the circuit breaker may cause a spark and result in electric shock or fire.

After unpacking the air conditioner, keep all packaging materials well out of the reach of children, as packaging materials can be dangerous to children.

- If a child places a bag over its head, it may result in suffocation.

Do not touch the front panel with your hands or fingers during the heating operation.

- This may result in electric shock or burns.

Do not insert your fingers or foreign substances into the outlet when the air conditioner is operating or the front panel is closing.

- Take special care that children do not injure themselves by inserting their fingers into the product.

Do not insert your fingers or foreign substances into the air inlet/outlet of the air conditioner.

- Take special care that children do not injure themselves by inserting their fingers into the product.

Do not strike or pull the air conditioner with excessive force.

- This may result in fire, injury, or problems with the product.

Do not place an object near the outdoor unit that allows children to climb onto the machine.

- This may result in children seriously injuring themselves.

Do not use this air conditioner for long periods of time in badly ventilated locations or near infirm people.

- Since this may be dangerous due to a lack of oxygen, open a window at least once an hour.

Do not use means to accelerate the defrost operation or to clean, other than those recommended by Samsung.

Do not pierce or burn.

Be aware that refrigerants may not contain an odour.

If any foreign substance such as water has entered the appliance, cut the power by unplugging the power plug and turning the circuit breaker off and then contact your nearest service centre.

- Failing to do so may result in electric shock or fire.

Do not attempt to repair, disassemble, or modify the appliance yourself.

- Do not use any fuse (such as copper, steel wire, etc.)other than the standard fuse.
- Failing to do so may result in electric shock, fire, problems with the product, or injury.

CAUTION

Do not place objects or devices under the indoor unit.

- Water dripping from the indoor unit may result in fire or property damage.

Check that the installation frame of the outdoor unit is not broken at least once a year.

- Failing to do so may result in injury, death or property damage.

Max current is measured according to IEC standard for safety and current is measured according to ISO standard for energy efficiency.

When the air conditioner does not operate properly for cooling or heating, there is a possibility of refrigerant leakage. If any leakage, stop operation, ventilate the room, and consult your dealer immediately for recharging refrigerant.

The refrigerant is not harmful. However, if it comes in contact with fire, it may generate harmful gases and there is risk of fire.

Safety Information

During transportation of the indoor unit, the pipe lines shall be covered with brackets for protection. Do not move the product with holding the pipe lines.

- It may cause gas leakage.

Do not install the product in a ship or a vehicle (such as a campervan).

- Salt, vibration or other environmental factor may cause the product malfunction, electric shock or fire.

Do not stand on top of the appliance or place objects (such as laundry, lighted candles, lighted cigarettes, dishes, chemicals, metal objects, etc.) on the appliance.

- This may result in electric shock, fire, problems with the product, or injury.

Do not operate the appliance with wet hands.

- This may result in electric shock.

Do not spray volatile material such as insecticide onto the surface of the appliance.

- As well as being harmful to humans, it may also result in electric shock, fire or problems with the product.

Do not drink the water from the air conditioner.

- The water may be harmful to humans.

Do not apply a strong impact to the remote controller and do not disassemble the remote controller.

Do not touch the pipes connected with the product.

- This may result in burns or injury.

Do not cut or burn the refrigerant container or pipings.

Do not point the air direction to the fireplace or heater.

Do not use this air conditioner to preserve precision equipment, food, animals, plants or cosmetics, or for any other unusual purposes.

- This may result in property damage.

Avoid directly exposing humans, animals or plants to the air flow from the air conditioner for long periods of time.

- This may result in harm to humans, animals or plants.

This appliance is not intended for use by persons (including children) with reduced physical, sensory or mental capabilities, or lack of experience and knowledge, unless they have been given supervision or instruction concerning use of the appliance by a person responsible for their safety. Children should be supervised to ensure that they do not play with the appliance.

For use in Europe: This appliance can be used by children aged from 8 years and above and persons with reduced physical, sensory or mental capabilities or lack of experience and knowledge if they have been given supervision or instruction concerning use of the appliance in a safe way and understand the hazards involved. Children shall not play with the appliance. Cleaning and user maintenance shall not be made by children without supervision.

FOR CLEANING

⚠ WARNING

Do not clean the appliance by spraying water directly onto it. Do not use benzene, thinner, alcohol or acetone to clean the appliance.

- This may result in discoloration, deformation, damage, electric shock or fire.

Before cleaning or performing maintenance, unplug the air conditioner from the wall socket and wait until the fan stops.

- Failing to do so may result in electric shock or fire.

⚠ CAUTION

Take care when cleaning the surface of the heat exchanger of the outdoor unit since it has sharp edges.

- To avoid cutting your fingers, wear thick cotton gloves when cleaning it.
- This should be done by a qualified technician please contact your installer or service centre.

Do not clean the inside of the air conditioner by yourself.

- For cleaning inside the appliance, contact your nearest service centre.
- When cleaning the internal filter, refer to the descriptions in the ‘Cleaning and Maintaining’ section.
- Failure to do may result in damage, electric shock or fire.
- Make sure to prevent any injury from sharp edges of the surface when handling the heat exchanger.

Indoor Unit Overview

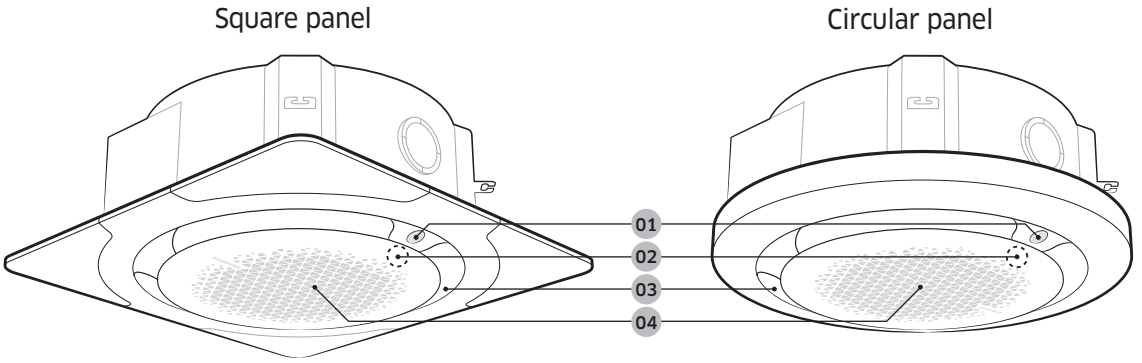

01 Display

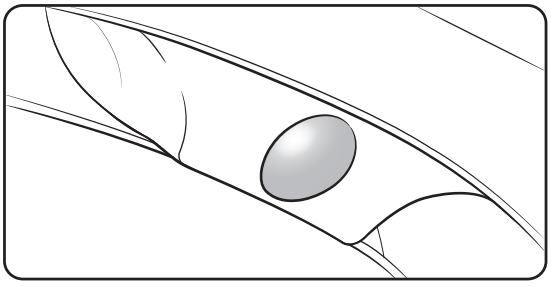

Operation status	Indication on the display
Power on	Ice blue (blinking)
In operation	Ice blue
Stopped	Off
Timed on/off function	Blue
Requires filter cleaning	Yellow green
Defrost function	Ice blue (blinking once every 10 seconds)
Wide	
Mid	
Spot	
Swing	

NOTE

- For the AR-KH00E wireless remote control, the air flow direction indications appear on its display, too.
- By using the AR-KH00E wireless remote control, you can turn on or turn off the air flow direction indications that appear on the indoor unit display.
- For the MR-EH00 wireless remote control, which is designed generally for any indoor units, the air flow direction is not shown on the remote control display. Control the air flow direction with checking it on the indoor unit display.

02 Remote control sensor (behind the front grille)

03 Air outlet

04 Front grille /
Air filter (behind the front grille)

NOTE

- For information on how to operate the product, see the user manual for the remote control.
- The actual appearances of the indoor units and their displays may differ slightly from the images depicted above.
- By using the AR-KH00E wireless remote control, which is designed specifically for the 360 cassette indoor units, you can operate them more conveniently. In addition, because you can check the operation status of each indoor unit on the remote control, you can use the indoor units more effectively.

Operation Features

Operating temperature and humidity

Mode	Outdoor temperature	Indoor temperature	Indoor humidity
Cool mode	-15°C to 50°C	18°C to 32°C	80% or less
Heat mode	-20°C to 24°C	30°C or less	-
Dry mode	-15°C to 50°C	18°C to 32°C	80% or less

⚠ CAUTION

- If you use the air conditioner at a relative humidity above 80%, it may cause a formation of condensation and a leakage of water on the floor.
- The rated heating capacity is based on an outdoor temperature of 7°C. If the outdoor temperature goes down below 0°C, heating efficiencies may decrease depending on the temperature conditions.
- If the indoor unit is out of the operating temperature and humidity range, the safery device may operate and the air conditioner may stops.

Cleaning and Maintaining

Cleaning the indoor unit exterior

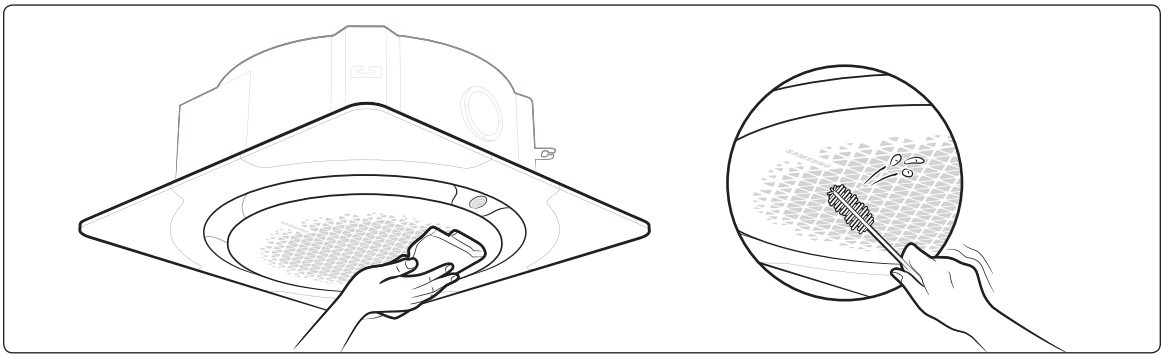

Wipe the surface of the unit with a slightly wet or dry cloth when needed. Wipe off dirt from odd-shaped areas by using a soft brush.

⚠ CAUTION

- Do not use alkaline detergent, sulphuric acid, hydrochloric acid, or organic solvents (such as thinner, kerosene, and acetone) to clean the surfaces.
- Do not put any stickers on it as this can damage the surface of the indoor unit.

Disassembling the air filter

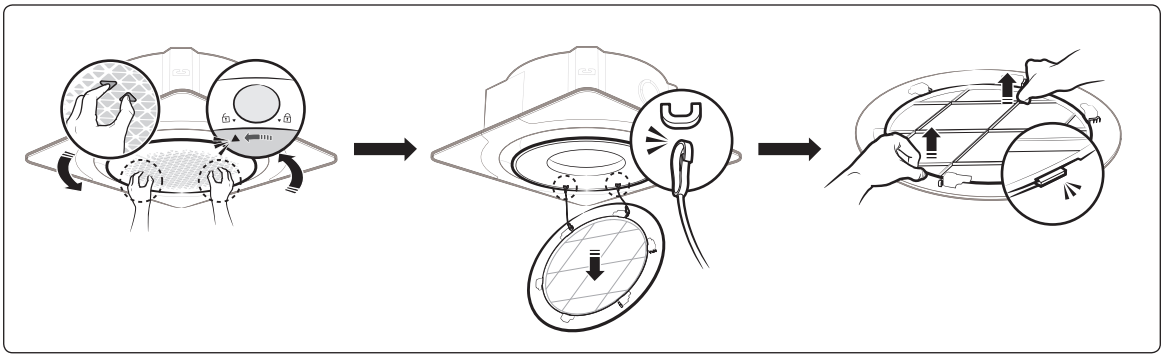

⚠ CAUTION

- For cleaning and maintenance, be sure to turn off the circuit breaker.

NOTE

- When the next filter-cleaning time arrives (after 1000 hours of operation), the indoor unit display appears in yellow green.

Cleaning the air filter

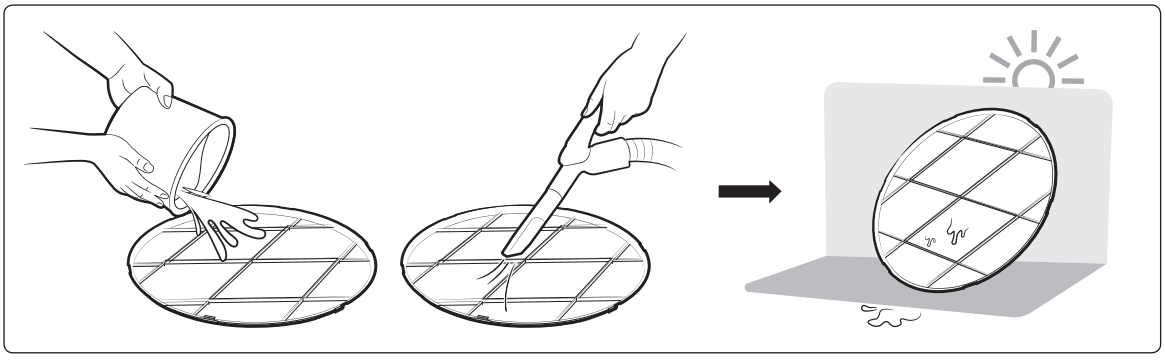

NOTE

- Clean the air filter once every two weeks.
- Spray water or use a vacuum cleaner to remove dust.
- After removing dust, dry the air filter completely.
  - Avoid direct sunlight. Failure to do so may deform the air filter.

Reassembling the air filter

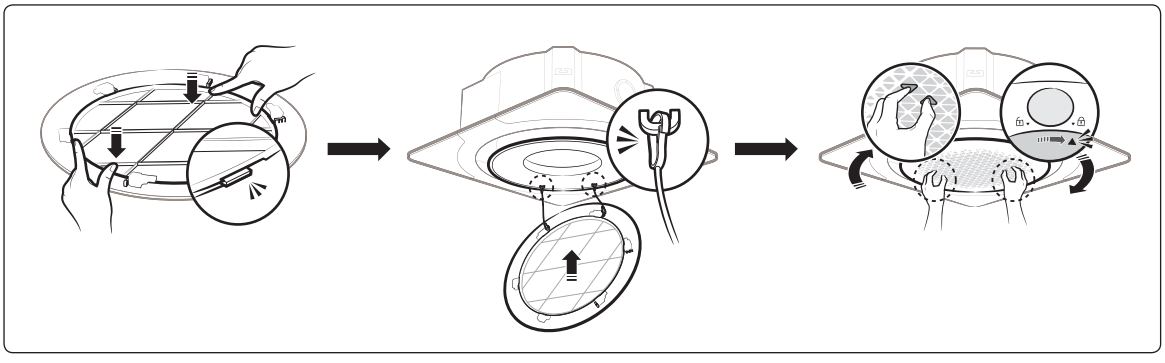

After cleaning and reassembling the air filter, reset the filter-cleaning reminder as follows:

- AR-KH00E remote control: Options > Select **Filter Reset**.
- MR-EH00 remote control: Hold down the Filter Reset button for two seconds.

NOTE

- If you try to assemble the air filter upside down, it will not be assembled because it cannot be clamped by the internal structure.

Cleaning and Maintaining

Periodical maintenance

Unit	Maintenance item	Interval	Requires qualified technicians
Indoor unit	Clean the air filter.	At least once a month	
	Clean the condensate drain pan.	Once a year	Required
	Clean up the heat exchange.	Once a year	Required
	Clean the condensate drain pipe.	Once every 4 months	Required
	Replace the remote control batteries.	At least once a year	
Outdoor unit	Clean the heat exchanger on the outside of the unit.	Once every 4 months	Required
	Clean the heat exchanger on the inside of the unit.	Once a year	Required
	Clean the electric components with jets of air.	Once a year	Required
	Verify that all the electric components are firmly tightened.	Once a year	Required
	Clean the fan.	Once a year	Required
	Verify that the fan assemblies are firmly tightened.	Once a year	Required
	Clean the condensate drain pan.	Once a year	Required

Troubleshooting

Refer to the following chart if the air conditioner operates abnormally. This may save time and unnecessary expense.

Problem	Solutionz
The air conditioner does not operate at all.	• Check if the power plug is properly connected. • Check whether the auxiliary power switch (MCCB, ELB) is turned on. • If the auxiliary power switch (MCCB, ELB) is turned off, the air conditioner does not work although you press the (Power) button. • When you clean the air conditioner or do not use it for an extended period of time, turn off the auxiliary power switch (MCCB, ELB). • After the air conditioner is not used for an extended period of time, be sure to turn on the auxiliary power switch (MCCB, ELB) 6 hours before starting operation. **NOTE** • The auxiliary power switch (MCCB, ELB) is sold separately. • Make sure that auxiliary power switch (MCCB, ELB) is installed in the distribution box inside the building. • If the air conditioner is turned off by the Timed off function, turn on the air conditioner again by pressing the (Power) button.
The temperature does not change.	• Check whether the Fan mode is running. In the Fan mode, the air conditioner controls the set temperature automatically, and you cannot change the set temperature.
Warm air does not come out of the air conditioner.	• Check whether the outdoor unit is designed for cooling only. In this case, warm air does not come out although you select the Heat mode. • Check whether the remote control is designed only for cooling only. Use a remote control that supports both cooling and heating.
The fan speed does not change.	• Check whether the Auto or Dry mode is running. In these modes, the air conditioner controls the fan speed automatically, and you cannot change the fan speed.
The wireless remote control does not operate.	• Check whether the batteries are discharged. Replace the batteries with new ones. • Make sure that nothing is blocking the remote control sensor. • Check whether any strong lighting sources are near the air conditioner. Strong light which comes from fluorescent bulbs or neon signs may interfere with the remote control.

Cleaning and Maintaining

Problem	Solutionz
The wired remote control does not operate.	• Check whether the indicator is displayed at the bottom right of the remote control display. In this case, turn off both the air conditioner and the auxiliary power switch, and then contact a service centre.
The air conditioner is not turned on or off immediately with the wired remote control.	• Check whether the wired remote control is set for group control. In this case, the air conditioners connected to the wired remote control are turned on or off sequentially. This operation takes up to 32 seconds.
The Timed on/off function does not operate.	• Check whether you pressed the (SET) (SET) button on the remote control after setting the on/off time. Set the on/off time.
The indoor unit display blinks continuously.	• Turn on the air conditioner again by pressing the (Power) button. • Turn off and then turn on the auxiliary power switch, and then turn on the conditioner. • If the indoor unit display is still blinking, contact a service centre.
I want to get cooler air.	• Operate the air conditioner with a electric fan to save energy and enhance the cooling efficiency.
The air is not cool or warm enough.	• In the Cool mode, cool air does not come out if the set temperature is higher than the current temperature. – MR-EH00 remote control: Press the Temperature button repeatedly until the set temperature (minimum: 18°C) is set to lower than the current temperature. – AR-KH00E remote control: Press the Temperature button on the remote control. Then rotate the Wheel until the set temperature (minimum: 18°C) is set to lower than the current temperature. • In the Heat mode, warm air does not come out if the set temperature is lower than the current temperature. – MR-EH00 remote control: Press the Temperature button repeatedly until the set temperature (maximum: 30°C) is set to higher than the current temperature. – AR-KH00E remote control: Press the Temperature button on the remote control. Then rotate the Wheel until the set temperature (maximum: 30°C) is set to higher than the current temperature.

Problem	Solutionz
The air is not cool or warm enough.	• Both cooling and heating do not operate in the Fan mode. Select the Cool, Heat, Auto, or Dry mode. • Check whether the air filter is blocked with dirt. A dusty filter may decrease the cooling and heating efficiencies. Clean the air filter frequently. • If a cover is on the outdoor unit or any obstacle is present near the outdoor unit, remove them. • Install the outdoor unit in a well-ventilated place. Avoiding places exposed to direct sunlight or close to a heating appliance. • Place a sunscreen over the outdoor unit to protect it from direct sunlight. • If the indoor unit is installed in a place exposed to direct sunlight, pull the curtains on the windows. • Close the windows and doors to maximize the cooling and heating efficiencies. • If the Cool mode is stopped and then started immediately, cool air comes out after about 3 minutes to protect the compressor of the outdoor unit. • When the Heat mode is started, warm air does not come out immediately to prevent cool air from coming out at the beginning. • If the refrigerant pipe is too long, the cooling and heating efficiencies may be decreased. Avoid exceeding the maximum pipe length.
The air conditioner makes strange noises.	• In certain conditions (especially, when the outdoor temperature is lower than 20°C), a hissing, rumbling, or splashing sound may be heard while the refrigerant is circulating through the air conditioner. This is a normal operation. • When you press the ⏻ (Power) button on the remote control, noise may be heard from the drain pump inside the air conditioner. This noise is a normal sound.
Unpleasant odours permeate the room.	• If the air conditioner is running in a smoky area or if there is a smell entering from outside, ventilate the room properly. • If both indoor temperature and indoor humidity are high, operate the air conditioner in the Clean or Fan mode for 1 to 2 hours. • If the air conditioner has not been operated for an extended period of time, clean the indoor unit and then operate the air conditioner in the Fan mode for 3 to 4 hours to dry the inside of the indoor unit for removal of unpleasant odours. • If the air filter blocked with dirt, clean the air filter.

Cleaning and Maintaining

Problem	Solutionz
Steam is produced on the indoor unit.	• In winter, if the indoor humidity is high, steam may be produced around the air outlet while the defrost function is running. This is a normal operation.
The outdoor unit fan continues to operate when the air conditioner is turned off.	• When the air conditioner is turned off, the outdoor unit fan may continue to operate to reduce noise of the refrigerant gas. This is a normal operation.
Water drops from the piping connections of the outdoor unit.	• Condensation may develop due to the difference in temperature. This is a normal condition.
Steam is produced on the outdoor unit.	• In winter, when the air conditioner runs in the Heat mode, the frost on the heat exchanger melts and steam may be produced. This is a normal operation, neither product malfunction nor a fire.

Technical specifications

Type	Model	Net weight (kg)	Net dimension (W x D x H) (mm)
Indoor unit	AC071RN4PKG/EU	20.2	947 x 947 x 281

Information about refrigerant

Important information: regulation regarding the refrigerant used

This product contains fluorinated greenhouse gases. Do not vent gases into the atmosphere.

⚠ CAUTION

- If the system contains 5 tCO_2e or more of fluorinated greenhouse gases, it must be checked for leakage at least once every 12 months, according to regulation No. 517/2014. This activity must be covered by qualified personnel only. In the case of the situation above, the installer (or authorized person with responsibility for final check) must provide a maintenance book, with all the information recorded, according to REGULATION (EU) No. 517/2014 OF THE EUROPEAN PARLIAMENT AND OF THE COUNCIL of 16 April 2014 on fluorinated greenhouse gases.

Refrigenat type	GWP value
R-32	675

- GWP: Global Warming Potential
- Calculating tCO_2e: kg x GWP/1000

SAMSUNG

QUESTIONS OR COMMENTS?

COUNTRY	CALL	OR VISIT US ONLINE AT
UK	0330 SAMSUNG (7267864)	www.samsung.com/uk/support
IRELAND (EIRE)	0818 717100	www.samsung.com/ie/support
GERMANY	06196 77 555 77 *OTH	www.samsung.com/de/support
FRANCE	01 48 63 00 00	www.samsung.com/fr/support
ITALIA	800-SAMSUNG (800.7267864)	www.samsung.com/it/support
SPAIN	0034902172678	www.samsung.com/es/support
PORTUGAL	808 207 267	www.samsung.com/pt/support
LUXEMBURG	261 03 710	www.samsung.com/be_fr/support
NETHERLANDS	088 90 90 100	www.samsung.com/nl/support
BELGIUM	02-201-24-18	www.samsung.com/be/support (Dutch) www.samsung.com/be_fr/support (French)
NORWAY	21629099	www.samsung.com/no/support
DENMARK	707 019 70	www.samsung.com/dk/support
FINLAND	030-6227 515	www.samsung.com/fi/support
SWEDEN	0771 726 786	www.samsung.com/se/support
POLAND	801-172-678* lub +48 22 607-93-33* Dedykowana infolinia do obsługi zapytań dotyczących telefonów komórkowych: 801-672-678* lub +48 22 607-93-33* * (opłata według taryfy operatora)	http://www.samsung.com/pl/support/
HUNGARY	0680SAMSUNG (0680-726-7864))	www.samsung.com/hu/support

COUNTRY	CALL	OR VISIT US ONLINE AT
AUSTRIA	0800-SAMSUNG (0800-7267864) [Only for KNOX customers] 0800 400848 [Only for Premium HA] 0800-366661 [Only for Dealers] 0810-112233 [Only for E-Store] 0800 100 232	www.samsung.com/at/support
SWITZERLAND	0800 726 78 64 (0800-SAMSUNG)	www.samsung.com/ch/support (German) www.samsung.com/ch_fr/support (French)
CZECH	800 - SAMSUNG (800-726786)	www.samsung.com/cz/support
SLOVAKIA	0800 - SAMSUNG (0800-726 786)	www.samsung.com/sk/support
CROATIA	072 726 786	www.samsung.com/hr/support
BOSNIA	055 233 999	www.samsung.com/support
MONTENEGRO	020 405 888	www.samsung.com/support
SLOVENIA	080 697 267 (brezplačna številka)	www.samsung.com/si/support
SERBIA	011 321 6899	www.samsung.com/rs/support
ALBANIA	045 620 202	www.samsung.com/al/support
BULGARIA	*3000 Цена в мрежата 0800 111 31 , Безплатна телефонна линия	www.samsung.com/bg/support
ROMANIA	*8000 (apel in retea) 08008-726-78-64 (08008-SAMSUNG) Apel GRATUIT	www.samsung.com/ro/support
CYPRUS	8009 4000 only from landline, toll free	www.samsung.com/gr/support
GREECE	80111-SAMSUNG (80111 726 7864) only from land line (+30) 210 6897691 from mobile and land line	www.samsung.com/gr/support
LITHUANIA	8-800-77777	www.samsung.com/lt/support
LATVIA	8000-7267	www.samsung.com/lv/support
ESTONIA	800-7267	www.samsung.com/ee/support

SAMSUNG ELECTRONICS CO., LTD.
107, Hanamsandan 6beon-ro, Gwangsan-gu, Gwangju-si, Korea 62218

Samsung Electronics
Service Department
PO Box 12987, Blackrock, Co. Dublin. Ireland
or
Blackbushe Business Park, Yateley, GU46 6GG. UK

This appliance is filled with R-32.