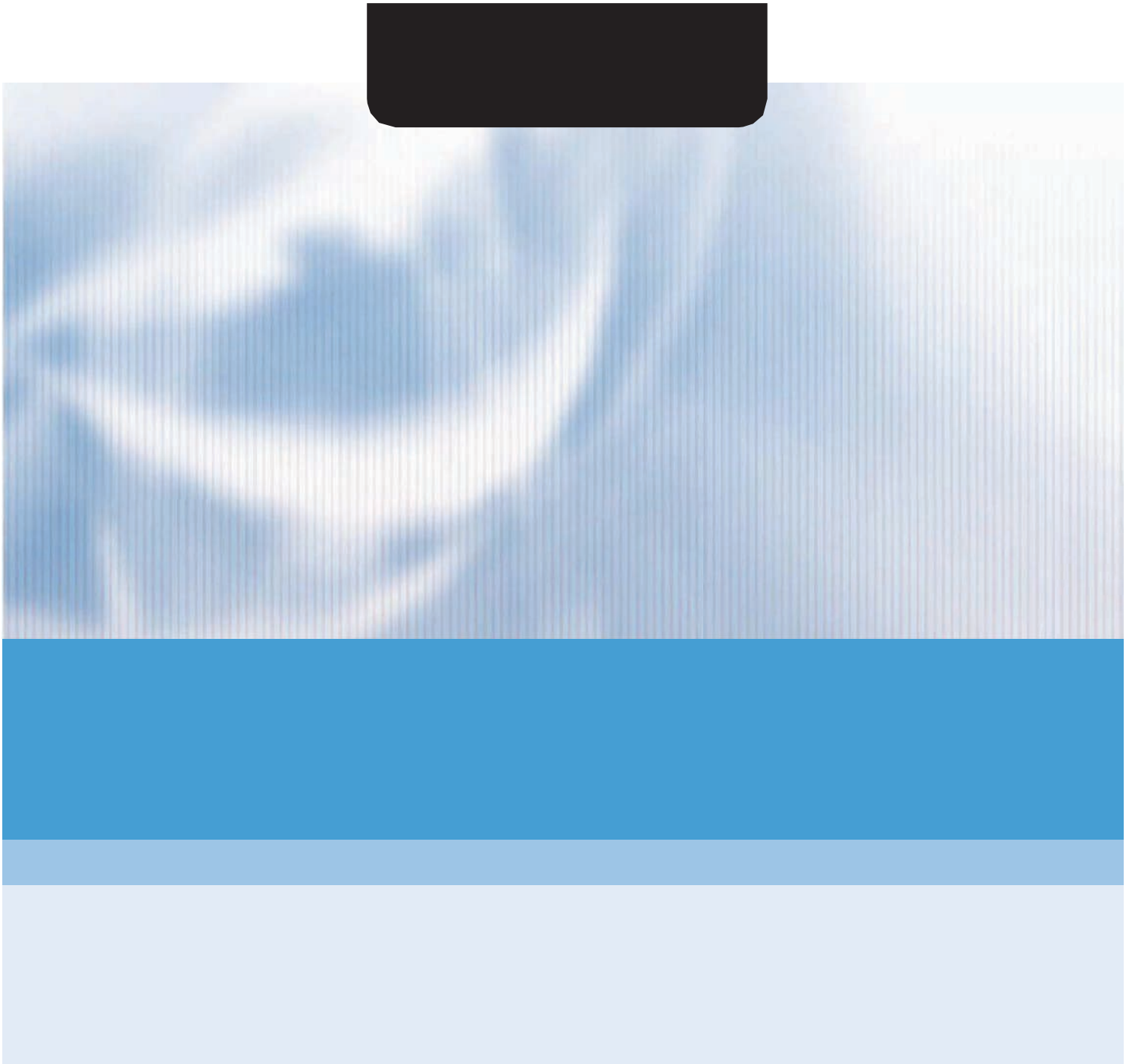

sinclair

AIR CONDITIONING

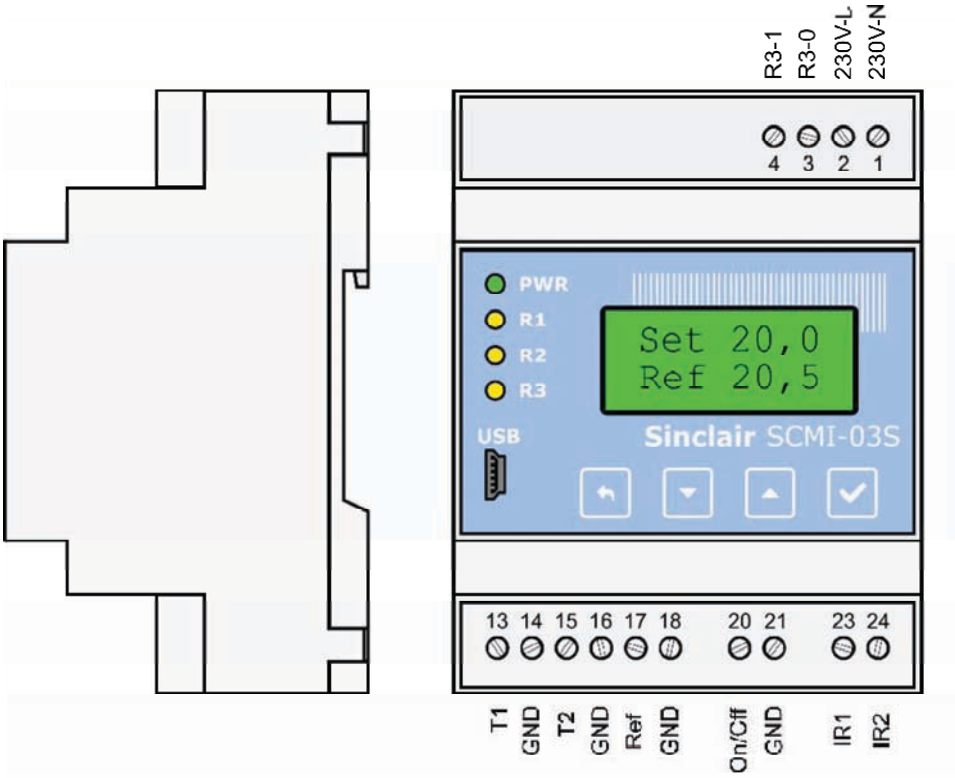
R3-1
R3-0
230V-L
230V-N
4 3 2 1
PWR
R1
R2
R3
USB
Set 20,0
Ref 20,5
Sinclair SCMI-03S
13 14 15 16 17 18 20 21 23 24
T1
GND
T2
GND
Ref
GND
On/Off
GND
IR1
IR2

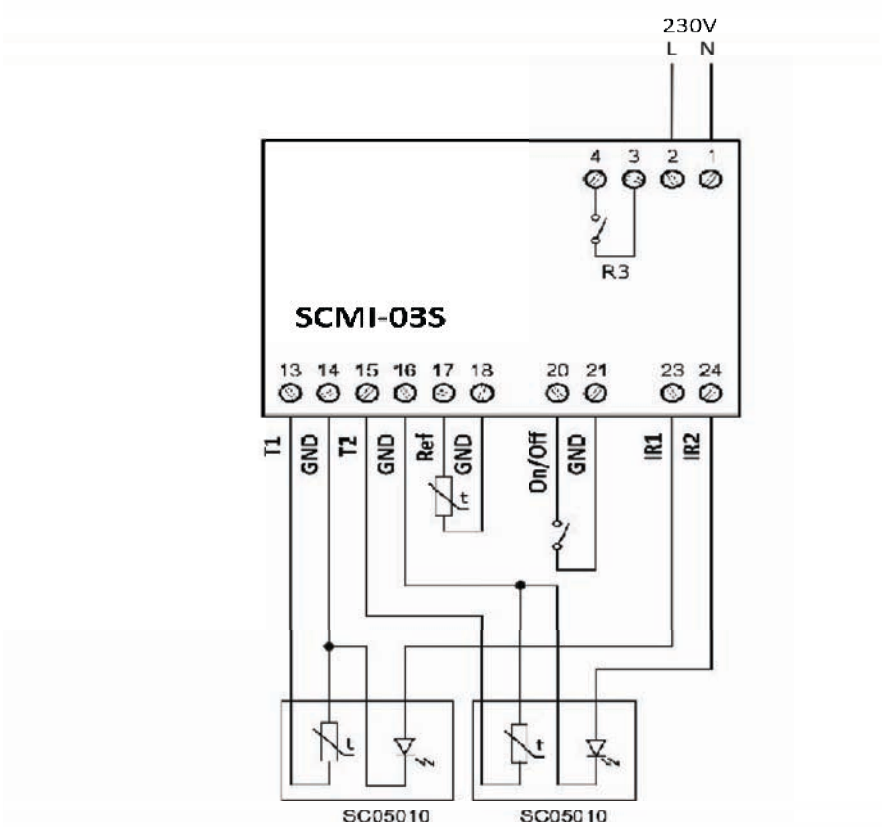
230V
L N
4 3 2 1
R3
SCMI-03S
13 14 15 16 17 18 20 21 23 24
T1
GND
T2
GND
Ref
GND
On/Off
GND
IR1
IR2
SC05010
SC05010

1
2

CE